GOLEDO-T 160 LED

IK08 IP66

LT2037.760-EN-T-CB-A-700-730-EN-C1

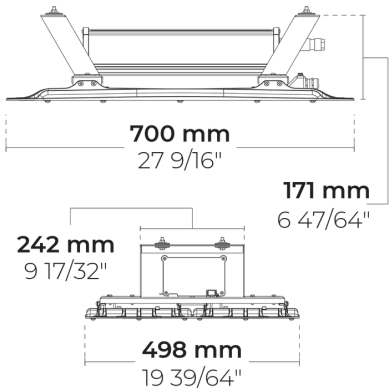

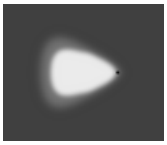

[T-CB-A]
Tunnel, Counter beam, Type A

Variant

Light distribution	[T-CB-A]
Delivered lumens flux	47310 lm
Rated input power	340 W
Colour temperature	3000 K CRI 70
Luminaire efficacy	139 lm/W
Lamp	160 LED
MacAdam Ellipse	3 SDCM
Lifetime L90B50 (hour)	>102,000
Lifetime L80B50 (hour)	>102,000

Options

Technical information

Mounting	Standard strap connection. Sliding mounting bracket is optional through extra
Housing	Corrosion resistant, die-cast, marine grade aluminum housing
Finishing	Chromate conversion pretreatment followed by electrostatic powder coating
Fasteners	Stainless steel (AISI 304 / EN 1.4301 grade)
Gasket	Silicone
Lens / Reflector	PMMA lens with high optical efficiency
Glass / Diffusor	Tempered safety glass
Impact protection	IK08
Ingress protection	IP66
Input voltage	220-240V 50/60Hz
Insulation class	Class I
Weight	18.75 kg
LED module	High power LEDs on metal-core PCB
Driver	Internal LED driver
Driver surge protection	10/6 kV
Power factor	> 0.95
Through wiring	Single cable entry
Operating temperature	-40...50°C
Cable	1 m of halogen-free cable
Notes	This product can be supplied with Insulation class (Class II) upon request. Please contact factory.

HPR Pazarlama A.Ş.
Başkent OSB 22. Cd. No: 2, Malıköy, Temelli, Sincan, 06909 Ankara, Turkey
+90 312 267 54 30
info@hepergroup.com

HEPER Europe GmbH
Ahornweg 5a, 58675 Hemer, Germany
+49 237 2901 2975
infoEU@hepergroup.com

We reserve the right to change specifications without prior written notice. Edition: 17.05.2024. For current version visit heperlighting.com. All flux (±%7 tolerance) and power values (±%10 tolerance) are derived following appropriate IES, CIE, and applicable standards.

Project name		Type		Quantity	
Date		Note			

LT2037.760-EN-T-CB-A-700-730-___-EN-C1-___-___-___-___-___

Light distribution	Rated input power	Colour temperature	Control	Product colours

HPR Pazarlama A.Ş.
Başkent OSB 22. Cd. No: 2, Malıköy, Temelli,
Sincan, 06909 Ankara, Turkey
+90 312 267 54 30
info@hepergroup.com

HEPER Europe GmbH
Ahornweg 5a, 58675
Hemer, Germany
+49 237 2901 2975
infoEU@hepergroup.com

We reserve the right to change specifications without prior written notice. Edition: 17.05.2024. For current version visit heperlighting.com. All flux (±%7 tolerance) and power values (±%10 tolerance) are derived following appropriate IES, CIE, and applicable standards.

[T-CB-A] Tunnel, Counter beam, Type A	**[700]** 340 W	**[730]** 3000 K CRI 70	**[ONOFF]** On/Off	**[CC]** Custom colour (Please specify RAL code)
[]	**[500]** 237 W	**[740]** 4000 K CRI 70	**[0-10V]** 0-10V	**[7035]** Light grey (RAL 7035)
[T-ASYM-A] Tunnel, Asymmetric, Type A	**[500]** 227 W		**[DALI]** DALI	
[T-ASYM-B] Tunnel, Asymmetric, Type B	**[500]** 239 W		**[AUTO]** AutoDIM	
[T-ASYM-C] Tunnel, Asymmetric, Type C	**[500]** 226 W		**[STEP]** StepDIM	
[T-ASYM-D] Tunnel, Asymmetric, Type D	**[500]** 230 W			
[T-CB-B] Tunnel, Counter beam, Type B	**[350]** 154 W			
[T-SYM-A] Tunnel, Symmetric, Type A	**[350]** 153 W			
[T-SYM-B] Tunnel, Symmetric, Type B	**[350]** 163 W			
[T-SYM-C] Tunnel, Symmetric, Type C	**[350]** 156 W			
[T-SYM-D] Tunnel, Symmetric, Type D	**[700]** 341 W			
	[700] 339 W			
	[500] 232 W			
	[500] 234 W			
	[500] 236 W			
	[500] 235 W			
	[350] 157 W			
	[350] 159 W			
	[350] 161 W			
	[350] 160 W			
	[350] 158 W			
Extras				

HPR Pazarlama A.Ş.
Başkent OSB 22. Cd. No: 2, Malıköy, Temelli, Sincan, 06909 Ankara, Turkey
+90 312 267 54 30
info@hepergroup.com

HEPER Europe GmbH
Ahornweg 5a, 58675 Hemer, Germany
+49 237 2901 2975
infoEU@hepergroup.com

We reserve the right to change specifications without prior written notice. Edition: 17.05.2024. For current version visit heperlighting.com. All flux (±%7 tolerance) and power values (±%10 tolerance) are derived following appropriate IES, CIE, and applicable standards.

External surge protection
[SP10] 10 kV
Light output
[CLO] Constant light output
Consult the factory
[C2] Class II **[UNI]** 120-277V 50/60Hz
Luminaire body options
[DPC] Double powder coating

HPR Pazarlama A.Ş.
Başkent OSB 22. Cd. No: 2, Malıköy, Temelli, Sincan, 06909 Ankara, Turkey
+90 312 267 54 30
info@hepergroup.com

HEPER Europe GmbH
Ahornweg 5a, 58675 Hemer, Germany
+49 237 2901 2975
infoEU@hepergroup.com

We reserve the right to change specifications without prior written notice. Edition: 17.05.2024. For current version visit heperlighting.com. All flux (±%7 tolerance) and power values (±%10 tolerance) are derived following appropriate IES, CIE, and applicable standards.