DOMINO AFX 2 Module Duo

IK08 IP66

LP4091.862-EN-T4-700-827-EN-C1

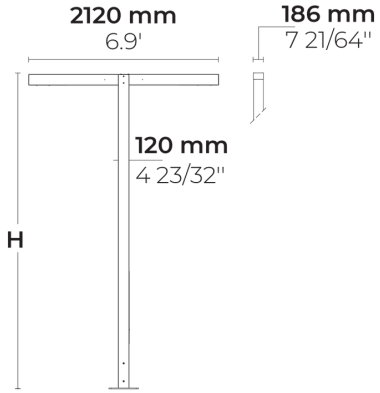

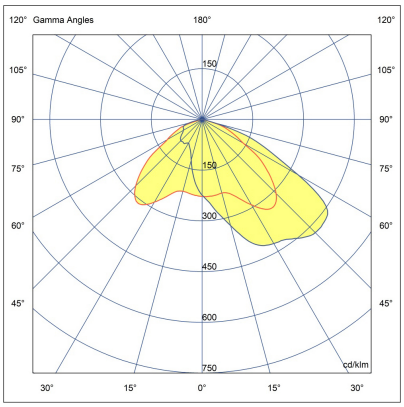

[T4]
Type IV, Asymmetric, Forward throw

Variant

Light distribution	[T4] 117x64°
Delivered lumens flux	14510 lm
Rated input power	135 W
Colour temperature	2700 K CRI 80
Luminaire efficacy	103 lm/W
Lamp	64 LED
MacAdam Ellipse	3 SDCM
BUG rating	B1-U0-G1
Lifetime L90B50 (hour)	>102,000
Lifetime L80B50 (hour)	>102,000

Options

Technical information

Mounting	Surface mountable
Housing	Corrosion resistant, marine grade aluminum housing
Finishing	Chromate conversion pretreatment followed by electrostatic powder coating
Fasteners	Stainless steel (AISI 304 / EN 1.4301 grade)
Gasket	Liquid silicone
Lens / Reflector	PMMA lens with high optical efficiency
Glass / Diffusor	Tempered safety glass
Impact protection	IK08
Ingress protection	IP66
Input voltage	220-240V 50/60Hz
Insulation class	Class I
Weight	53.95 kg (4 m), 59.05 kg (5 m), 64.15 kg (6 m)
LED module	High power LEDs on metal-core PCB
Driver	Internal LED driver
Driver surge protection	10/6 kV
Power factor	> 0.95
Through wiring	Single cable entry
Operating temperature	-40...50°C
Cable	0.5 m of flexible cable
Pole detail	Poles are supplied with flange plate. Flange cover and anchorage can be ordered separately. Embedded base is optional
Notes	3000K CCT or warmer must be selected to be DarkSky International certified.

HPR Pazarlama A.Ş.
Başkent OSB 22. Cd. No: 2, Malıköy, Temelli, Sincan, 06909 Ankara, Turkey
+90 312 267 54 30
info@hepergroup.com

HEPER Europe GmbH
Ahornweg 5a, 58675 Hemer, Germany
+49 237 2901 2975
infoEU@hepergroup.com

We reserve the right to change specifications without prior written notice. Edition: 28.04.2024. For current version visit heperlighting.com. All flux (±%7 tolerance) and power values (±%10 tolerance) are derived following appropriate IES, CIE, and applicable standards.

Poles (Included)

Product specific poles with flange plate

Variant code	Height	Diameter / Dimensions	Spigot diameter
PAFD.R01.T003-H4	4m	180*120mm	
PAFD.R01.T003-H5	5m	180*120mm	
PAFD.R01.T003-H6	6m	180*120mm	

HPR Pazarlama A.Ş.
Başkent OSB 22. Cd. No: 2, Malıköy, Temelli, Sincan, 06909 Ankara, Turkey
+90 312 267 54 30
info@hepergroup.com

HEPER Europe GmbH
Ahornweg 5a, 58675 Hemer, Germany
+49 237 2901 2975
infoEU@hepergroup.com

We reserve the right to change specifications without prior written notice. Edition: 28.04.2024. For current version visit heperlighting.com. All flux (±%7 tolerance) and power values (±%10 tolerance) are derived following appropriate IES, CIE, and applicable standards.

Project name		Type		Quantity	
Date		Note			

LP4091.862-EN-T4-700-827-__-EN-C1-__-__-__-__-__

Light distribution	Rated input power	Colour temperature	Control	Product colours
[T4] Type IV, Asymmetric, Forward throw - 117x64°	**[700]** 135 W	**[827]** 2700 K CRI 80	**[ONOFF]** On/Off	**[HM1]** Black
[P4] Special pedestrian road distribution-right side traffic - 20x78°	**[350]** 68 W	**[830]** 3000 K CRI 80	**[DALI]** DALI	**[HM2]** Dark grey
[T1] Type I, Asymmetric, Side throw - 111x48°	**[500]** 97 W	**[740]** 4000 K CRI 70	**[AUTO]** AutoDIM	**[HM3]** Anthracite grey
[T2] Type II, Asymmetric, Side throw - 133x48°		**[840]** 4000 K CRI 80	**[STEP]** StepDIM	**[HM4]** Light grey
[T3] Type III, Asymmetric, Side throw - 143x63°				**[HM5]** White
[T5] Type V, Symmetric - 117°				**[HM6]** Bronze
				[CC] Custom colour (Please specify RAL code)

Height	Extras
[H4] 4m	**Light output**
[H5] 5m	**[BS]** Backlight Shield
[H6] 6m	**[CLO]** Constant light output
[HC]	**Consult the factory**
	[UNI] 120-277V 50/60Hz
	Luminaire body options
	[DPC] Double powder coating

HPR Pazarlama A.Ş.
Başkent OSB 22. Cd. No: 2, Malıköy, Temelli, Sincan, 06909 Ankara, Turkey
+90 312 267 54 30
info@hepergroup.com

HEPER Europe GmbH
Ahornweg 5a, 58675 Hemer, Germany
+49 237 2901 2975
infoEU@hepergroup.com

We reserve the right to change specifications without prior written notice. Edition: 28.04.2024. For current version visit heperlighting.com. All flux (±%7 tolerance) and power values (±%10 tolerance) are derived following appropriate IES, CIE, and applicable standards.