# PINA W Duo

LW8033.003-US

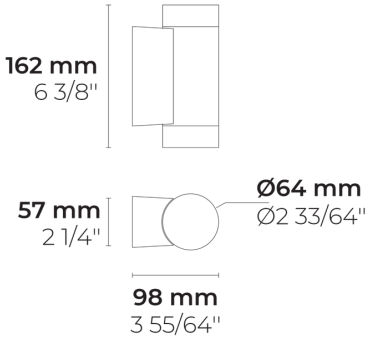

**[VN]**
Very narrow - NEMA Type 1 - 10°

**[N]**
Narrow - NEMA Type 2 - 25°

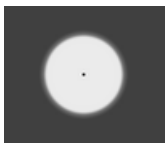

**[MN]**
Medium narrow - NEMA Type 3 - 36°

**[M]**
Medium - NEMA Type 4 - 60°

## Configurations

| | |
|---|---|
| **Light distribution** | [VN] 10°, [N] 25°, [MN] 36°, [M] 60° |
| **Delivered lumens flux** | 735 - 820 lm |
| **Rated input power** | 15 W |
| **Color temperature** | 2700 K CRI 90, 3000 K CRI 90, 4000 K CRI 90 |

## Options

| | |
|---|---|
| **Control** | On/Off, Phase dimming |
| **Product colors** | |

## Technical information

| | |
|---|---|
| **Mounting** | Wall mountable |
| **Housing** | Corrosion resistant, marine grade aluminum housing |
| **Finishing** | Chromate conversion pretreatment followed by electrostatic powder coating |
| **Fasteners** | Stainless steel (AISI 304 / EN 1.4301 grade) |
| **Gasket** | Silicone |
| **Glass / Diffusor** | Tempered safety glass |
| **Impact protection** | IK06 |
| **Ingress protection** | IP65 |
| **Input voltage** | 120-277V 50/60Hz |
| **Insulation class** | Class I |
| **Weight** | 0.9 lbs |
| **Driver** | Internal LED driver |
| **Power factor** | > 0.93 |
| **Through wiring** | Single power cord entry |
| **Power cord** | 8" of flexible power cord |

**HEPER USA LLC**
W227 N546 Westmound Drive Waukesha, 53186
Wisconsin, United States
+1 312 910 9740
infoUS@hepergroup.com

We reserve the right to change specifications without prior written notice. Edition: 12.12.2023. For current version visit heperlighting.com. All flux (±%7 tolerance) and power values (±%10 tolerance) are derived following appropriate IES, CIE, and applicable standards.

| Project name | | Type | | Quantity | |
|---|---|---|---|---|---|
| Date | | Note | | | |

**LW8033.003-US-___-___-___-___-___**

| Light distribution | Rated input power | Color temperature | Control | Product colors |
|---|---|---|---|---|
| **[VN]**<br>Very narrow - NEMA Type 1 - 10°<br><br>**[N]**<br>Narrow - NEMA Type 2 - 25°<br><br>**[MN]**<br>Medium narrow - NEMA Type 3 - 36°<br><br>**[M]**<br>Medium - NEMA Type 4 - 60° | **[]**<br>15 W | **[927]**<br>2700 K CRI 90<br><br>**[930]**<br>3000 K CRI 90<br><br>**[940]**<br>4000 K CRI 90 | **[ONOFF]**<br>On/Off<br><br>**[PD]**<br>Phase dimming | **[HM1]**<br>Black<br><br>**[HM2]**<br>Dark gray<br><br>**[HM3]**<br>Anthracite gray<br><br>**[HM4]**<br>Light gray<br><br>**[HM5]**<br>White<br><br>**[HM6]**<br>Bronze<br><br>**[CC]**<br>Custom color (Please specify RAL code) |

**HEPER USA LLC**
W227 N546 Westmound Drive Waukesha, 53186
Wisconsin, United States
+1 312 910 9740
infoUS@hepergroup.com

We reserve the right to change specifications without prior written notice. Edition: 12.12.2023. For current version visit heperlighting.com. All flux (±%7 tolerance) and power values (±%10 tolerance) are derived following appropriate IES, CIE, and applicable standards.

| Configuration code | Light distribution | Delivered lumens flux | Rated input power | Color temperature | Control |
|---|---|---|---|---|---|
| LW8033.003-US-VN-VN-927 | [VN] Very narrow - NEMA Type 1 - 10° | 735 lm | 15 W | 2700 K CRI 90 | On/Off, Phase dimming |
| LW8033.003-US-VN-VN-930 | [VN] Very narrow - NEMA Type 1 - 10° | 773 lm | 15 W | 3000 K CRI 90 | On/Off, Phase dimming |
| LW8033.003-US-VN-VN-940 | [VN] Very narrow - NEMA Type 1 - 10° | 820 lm | 15 W | 4000 K CRI 90 | On/Off, Phase dimming |
| LW8033.003-US-N-N-927 | [N] Narrow - NEMA Type 2 - 25° | 735 lm | 15 W | 2700 K CRI 90 | On/Off, Phase dimming |
| LW8033.003-US-N-N-930 | [N] Narrow - NEMA Type 2 - 25° | 773 lm | 15 W | 3000 K CRI 90 | On/Off, Phase dimming |
| LW8033.003-US-N-N-940 | [N] Narrow - NEMA Type 2 - 25° | 820 lm | 15 W | 4000 K CRI 90 | On/Off, Phase dimming |
| LW8033.003-US-MN-MN-927 | [MN] Medium narrow - NEMA Type 3 - 36° | 735 lm | 15 W | 2700 K CRI 90 | On/Off, Phase dimming |
| LW8033.003-US-MN-MN-930 | [MN] Medium narrow - NEMA Type 3 - 36° | 773 lm | 15 W | 3000 K CRI 90 | On/Off, Phase dimming |
| LW8033.003-US-MN-MN-940 | [MN] Medium narrow - NEMA Type 3 - 36° | 820 lm | 15 W | 4000 K CRI 90 | On/Off, Phase dimming |
| LW8033.003-US-M-M-927 | [M] Medium - NEMA Type 4 - 60° | 735 lm | 15 W | 2700 K CRI 90 | On/Off, Phase dimming |
| LW8033.003-US-M-M-930 | [M] Medium - NEMA Type 4 - 60° | 773 lm | 15 W | 3000 K CRI 90 | On/Off, Phase dimming |
| LW8033.003-US-M-M-940 | [M] Medium - NEMA Type 4 - 60° | 820 lm | 15 W | 4000 K CRI 90 | On/Off, Phase dimming |

**HEPER USA LLC**
W227 N546 Westmound Drive Waukesha, 53186
Wisconsin, United States
+1 312 910 9740
infoUS@hepergroup.com

We reserve the right to change specifications without prior written notice. Edition: 12.12.2023. For current version visit heperlighting.com. All flux (±%7 tolerance) and power values (±%10 tolerance) are derived following appropriate IES, CIE, and applicable standards.