GOLEDO-IN 40 LED

LW2037.765-EN

IK08 IP66

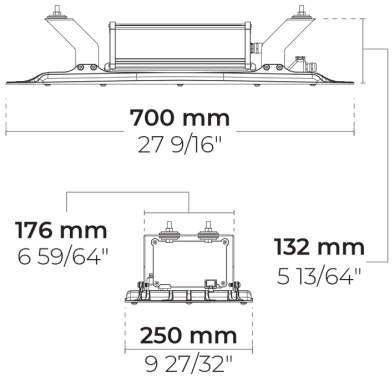

[N]
Narrow - 25°

[M]
Medium - 50°

Variants

Light distribution	[N] 25°, [M] 50°
Delivered lumens flux	7436 - 9628 lm
Rated input power	58 - 85 W
Colour temperature	3000 K CRI 80, 4000 K CRI 80
BUG rating	B4-U0-G1
Lifetime L90B50 (hour)	>102, 000
Lifetime L80B50 (hour)	>102, 000

Options

Control	On/Off, 0-10V, DALI, AutoDIM, StepDIM
Product colours	

Extras

External surge protection	10 kV
Light output	Constant light output
Consult the factory	Class II, 120-277V 50/60Hz
Luminaire body options	Double powder coating

Technical information

Mounting	Standard strap connection. Sliding mounting bracket is optional through extra
Housing	Corrosion resistant, die-cast, marine grade aluminum housing
Finishing	Chromate conversion pretreatment followed by electrostatic powder coating
Fasteners	Stainless steel (AISI 304 / EN 1.4301 grade)
Gasket	Silicone
Lens / Reflector	PMMA lens with high optical efficiency
Glass / Diffusor	Tempered safety glass
Impact protection	IK08
Ingress protection	IP66
Input voltage	220-240V 50/60Hz
Insulation class	Class I
Weight	9.01 kg
LED module	High power LEDs on metal-core PCB
Driver	Internal LED driver
Driver surge protection	10/6 kV
Power factor	> 0.95
Through wiring	Single cable entry
Operating temperature	-40...50°C
Cable	1 m of halogen-free cable
Notes	This product can be supplied with Insulation class (Class II) upon request. Please contact factory.

HPR Pazarlama A.Ş.
Başkent OSB 22. Cd. No: 2, Malıköy, Temelli,
Sincan, 06909 Ankara, Turkey
+90 312 267 54 30
info@hepergroup.com

HEPER Europe GmbH
Ahornweg 5a, 58675
Hemer, Germany
+49 237 2901 2975
infoEU@hepergroup.com

We reserve the right to change specifications without prior written notice. Edition: 23.02.2024. For current version visit heperlighting.com. All flux (±%7 tolerance) and power values (±%10 tolerance) are derived following appropriate IES, CIE, and applicable standards.

Project name		Type		Quantity	
Date		Note			

LW2037.765-EN-___-___-___-___-EN-C1-___-___-___-___-___

Light distribution	Rated input power	Colour temperature	Control	Product colours
[N] Narrow - 25° **[M]** Medium - 50°	**[500]** 58 W **[700]** 85 W	**[830]** 3000 K CRI 80 **[840]** 4000 K CRI 80	**[ONOFF]** On/Off **[0-10V]** 0-10V **[DALI]** DALI **[AUTO]** AutoDIM **[STEP]** StepDIM	**[CC]** Custom colour (Please specify RAL code) **[7035]** Light grey (RAL 7035)

Extras
External surge protection
[SP10] 10 kV
Light output
[CLO] Constant light output
Consult the factory
[C2] Class II **[UNI]** 120-277V 50/60Hz
Luminaire body options
[DPC] Double powder coating

HPR Pazarlama A.Ş.
Başkent OSB 22. Cd. No: 2, Malıköy, Temelli,
Sincan, 06909 Ankara, Turkey
+90 312 267 54 30
info@hepergroup.com

HEPER Europe GmbH
Ahornweg 5a, 58675
Hemer, Germany
+49 237 2901 2975
infoEU@hepergroup.com

We reserve the right to change specifications without prior written notice. Edition: 23.02.2024. For current version visit heperlighting.com. All flux (±%7 tolerance) and power values (±%10 tolerance) are derived following appropriate IES, CIE, and applicable standards.

Variant code	Light distribution	Delivered lumens flux	Rated input power	Colour temperature	Control
LW2037.765-EN-N-350-830	[N] Narrow - 25°	9628 lm	85 W	3000 K CRI 80	On/Off, 0-10V, DALI, AutoDIM, StepDIM
LW2037.765-EN-N-350-840	[N] Narrow - 25°	9628 lm	85 W	4000 K CRI 80	On/Off, 0-10V, DALI, AutoDIM, StepDIM
LW2037.765-EN-N-500-830	[N] Narrow - 25°	7436 lm	58 W	3000 K CRI 80	On/Off, 0-10V, DALI, AutoDIM, StepDIM
LW2037.765-EN-N-500-840	[N] Narrow - 25°	7436 lm	58 W	4000 K CRI 80	On/Off, 0-10V, DALI, AutoDIM, StepDIM
LW2037.765-EN-N-700-830	[N] Narrow - 25°	9628 lm	85 W	3000 K CRI 80	On/Off, 0-10V, DALI, AutoDIM, StepDIM
LW2037.765-EN-N-700-840	[N] Narrow - 25°	9628 lm	85 W	4000 K CRI 80	On/Off, 0-10V, DALI, AutoDIM, StepDIM
LW2037.765-EN-M-350-830	[M] Medium - 50°	9396 lm	85 W	3000 K CRI 80	On/Off, 0-10V, DALI, AutoDIM, StepDIM
LW2037.765-EN-M-350-840	[M] Medium - 50°	9396 lm	85 W	4000 K CRI 80	On/Off, 0-10V, DALI, AutoDIM, StepDIM
LW2037.765-EN-M-500-830	[M] Medium - 50°	7557 lm	58 W	3000 K CRI 80	On/Off, 0-10V, DALI, AutoDIM, StepDIM
LW2037.765-EN-M-500-840	[M] Medium - 50°	7557 lm	58 W	4000 K CRI 80	On/Off, 0-10V, DALI, AutoDIM, StepDIM
LW2037.765-EN-M-700-830	[M] Medium - 50°	9396 lm	85 W	3000 K CRI 80	On/Off, 0-10V, DALI, AutoDIM, StepDIM
LW2037.765-EN-M-700-840	[M] Medium - 50°	9396 lm	85 W	4000 K CRI 80	On/Off, 0-10V, DALI, AutoDIM, StepDIM

HPR Pazarlama A.Ş.
Başkent OSB 22. Cd. No: 2, Malıköy, Temelli,
Sincan, 06909 Ankara, Turkey
+90 312 267 54 30
info@hepergroup.com

HEPER Europe GmbH
Ahornweg 5a, 58675
Hemer, Germany
+49 237 2901 2975
infoEU@hepergroup.com

We reserve the right to change specifications without prior written notice. Edition: 23.02.2024. For current version visit heperlighting.com. All flux (±%7 tolerance) and power values (±%10 tolerance) are derived following appropriate IES, CIE, and applicable standards.