WINGS ML EVO 4 Module

LL2012.684-EN

IK08 IP66

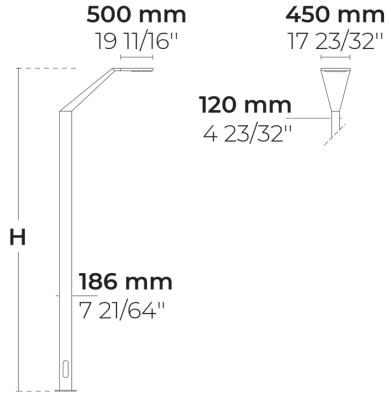

[T2]
Type II, Asymmetric,
Side throw - 130x85°

Variants

Light distribution	[T2] 130x85°
Delivered lumens flux	11643 - 14714 lm
Rated input power	136 W
Colour temperature	2700 K CRI 80, 3000 K CRI 80, 4000 K CRI 70, 4000 K CRI 80
BUG rating	B2-U0-G2, B3-U0-G2
Lifetime L90B50 (hour)	>60, 000
Lifetime L80B50 (hour)	>60, 000

Options

Control	On/Off
Product colours	
Height	5m, 6m,

Extras

Consult the factory	120-277V 50/60Hz
Luminaire body options	Double powder coating

Technical information

Mounting	Surface mountable
Housing	Corrosion resistant, marine grade aluminum housing
Finishing	Chromate conversion pretreatment followed by electrostatic powder coating
Fasteners	Stainless steel (AISI 304 / EN 1.4301 grade)
Gasket	Liquid silicone
Lens / Reflector	High reflectance aluminium coating, multifaceted micro reflector
Glass / Diffusor	Bio-based, enriched with bisphenol A diffusor
Impact protection	IK08
Ingress protection	IP66
Input voltage	220-240V 50/60Hz
Insulation class	Class I
Weight	64.34 kg (5 m), 72.07 kg (6 m)
LED module	Multi-chip high power LEDs on metal-core PCB
Driver	Internal LED driver
Driver surge protection	8/6 kV
Power factor	> 0.99
Through wiring	Single cable entry
Operating temperature	-40...50°C
Pole detail	Poles are supplied with flange plate. Flange cover and anchorage can be ordered separately. Embedded base is optional

HPR Pazarlama A.Ş.
Başkent OSB 22. Cd. No: 2, Malıköy, Temelli,
Sincan, 06909 Ankara, Turkey
+90 312 267 54 30
info@hepergroup.com

HEPER Europe GmbH
Ahornweg 5a, 58675
Hemer, Germany
+49 237 2901 2975
infoEU@hepergroup.com

We reserve the right to change specifications without prior written notice. Edition: 23.02.2024. For current version visit heperlighting.com. All flux (±%7 tolerance) and power values (±%10 tolerance) are derived following appropriate IES, CIE, and applicable standards.

Poles (Included)

Product specific poles with flange plate

Variant code	Height	Diameter / Dimensions	Spigot diameter
PAFD.R01.T002-H5	5m	186*120mm	
PAFD.R01.T002-H6	6m	186*120mm	

HPR Pazarlama A.Ş.
Başkent OSB 22. Cd. No: 2, Malıköy, Temelli, Sincan, 06909 Ankara, Turkey
+90 312 267 54 30
info@hepergroup.com

HEPER Europe GmbH
Ahornweg 5a, 58675 Hemer, Germany
+49 237 2901 2975
infoEU@hepergroup.com

We reserve the right to change specifications without prior written notice. Edition: 23.02.2024. For current version visit heperlighting.com. All flux (±%7 tolerance) and power values (±%10 tolerance) are derived following appropriate IES, CIE, and applicable standards.

Project name		Type		Quantity	
Date		Note			

LL2012.684-EN-___-___-___-___-EN-C1-___-___-___-___

Light distribution	Rated input power	Colour temperature	Control	Product colours
[T2] Type II, Asymmetric, Side throw - 130x85°	**[700]** 136 W	**[827]** 2700 K CRI 80 **[830]** 3000 K CRI 80 **[740]** 4000 K CRI 70 **[840]** 4000 K CRI 80	**[ONOFF]** On/Off	**[HM1]** Black **[HM2]** Dark grey **[HM3]** Anthracite grey **[HM4]** Light grey **[HM5]** White **[HM6]** Bronze **[CC]** Custom colour (Please specify RAL code)

Height	Extras
[H5] 5m **[H6]** 6m **[HC]**	**Consult the factory**
	[UNI] 120-277V 50/60Hz
	Luminaire body options
	[DPC] Double powder coating

HPR Pazarlama A.Ş.
Başkent OSB 22. Cd. No: 2, Malıköy, Temelli, Sincan, 06909 Ankara, Turkey
+90 312 267 54 30
info@hepergroup.com

HEPER Europe GmbH
Ahornweg 5a, 58675 Hemer, Germany
+49 237 2901 2975
infoEU@hepergroup.com

We reserve the right to change specifications without prior written notice. Edition: 23.02.2024. For current version visit heperlighting.com. All flux (±%7 tolerance) and power values (±%10 tolerance) are derived following appropriate IES, CIE, and applicable standards.

Variant code	Light distribution	Delivered lumens flux	Rated input power	Colour temperature	Control
LL2012.684-EN-T2-700-740	[T2] Type II, Asymmetric, Side throw - 130x85°	13795 lm	136 W	4000 K CRI 70	On/Off
LL2012.684-EN-T2-700-827	[T2] Type II, Asymmetric, Side throw - 130x85°	11643 lm	136 W	2700 K CRI 80	On/Off
LL2012.684-EN-T2-700-830	[T2] Type II, Asymmetric, Side throw - 130x85°	11783 lm	136 W	3000 K CRI 80	On/Off
LL2012.684-EN-T2-700-840	[T2] Type II, Asymmetric, Side throw - 130x85°	14714 lm	136 W	4000 K CRI 80	On/Off

HPR Pazarlama A.Ş.
Başkent OSB 22. Cd. No: 2, Malıköy, Temelli,
Sincan, 06909 Ankara, Turkey
+90 312 267 54 30
info@hepergroup.com

HEPER Europe GmbH
Ahornweg 5a, 58675
Hemer, Germany
+49 237 2901 2975
infoEU@hepergroup.com

We reserve the right to change specifications without prior written notice. Edition: 23.02.2024. For current version visit heperlighting.com. All flux (±%7 tolerance) and power values (±%10 tolerance) are derived following appropriate IES, CIE, and applicable standards.